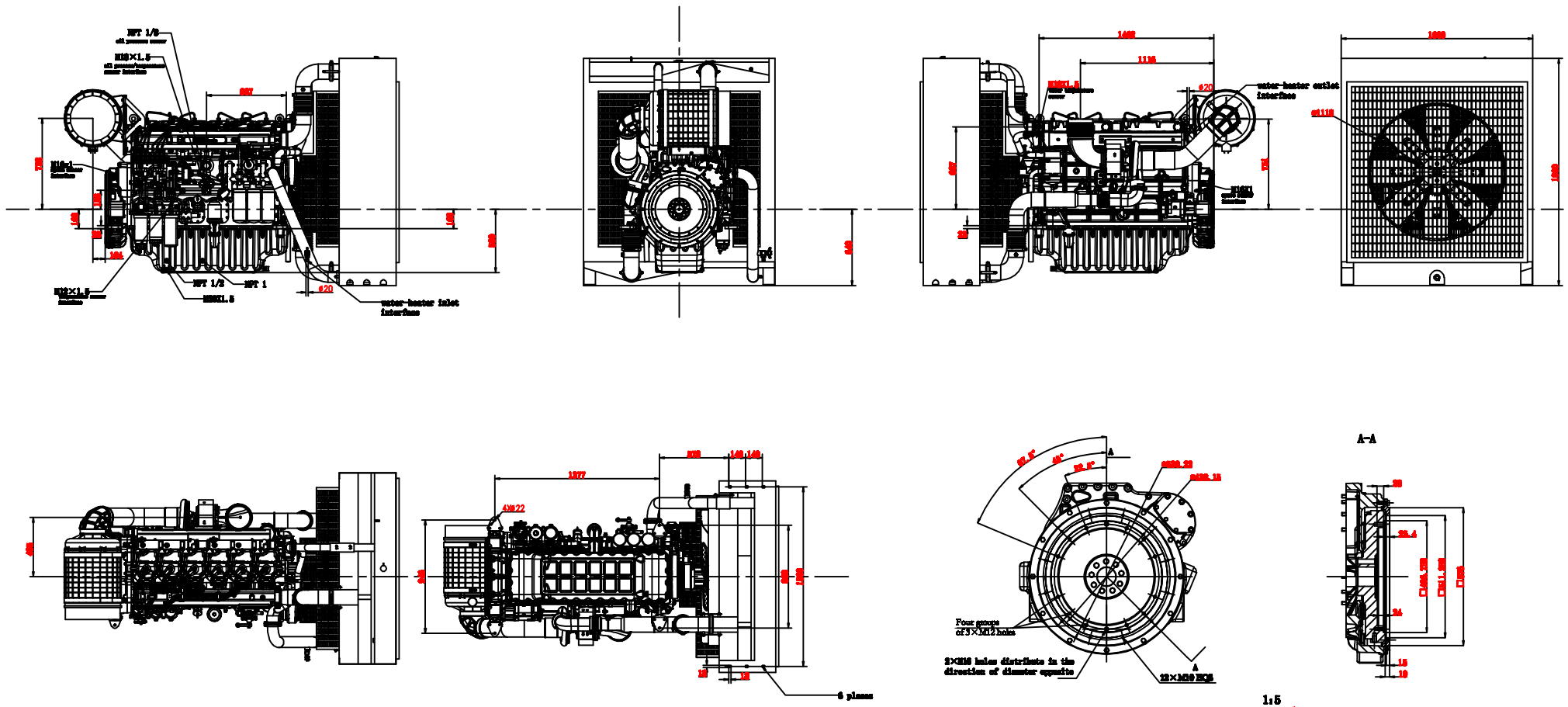

6M26 outline drawing

6M26

DEUTZ